PIONEER
EQUIPMENT INC.

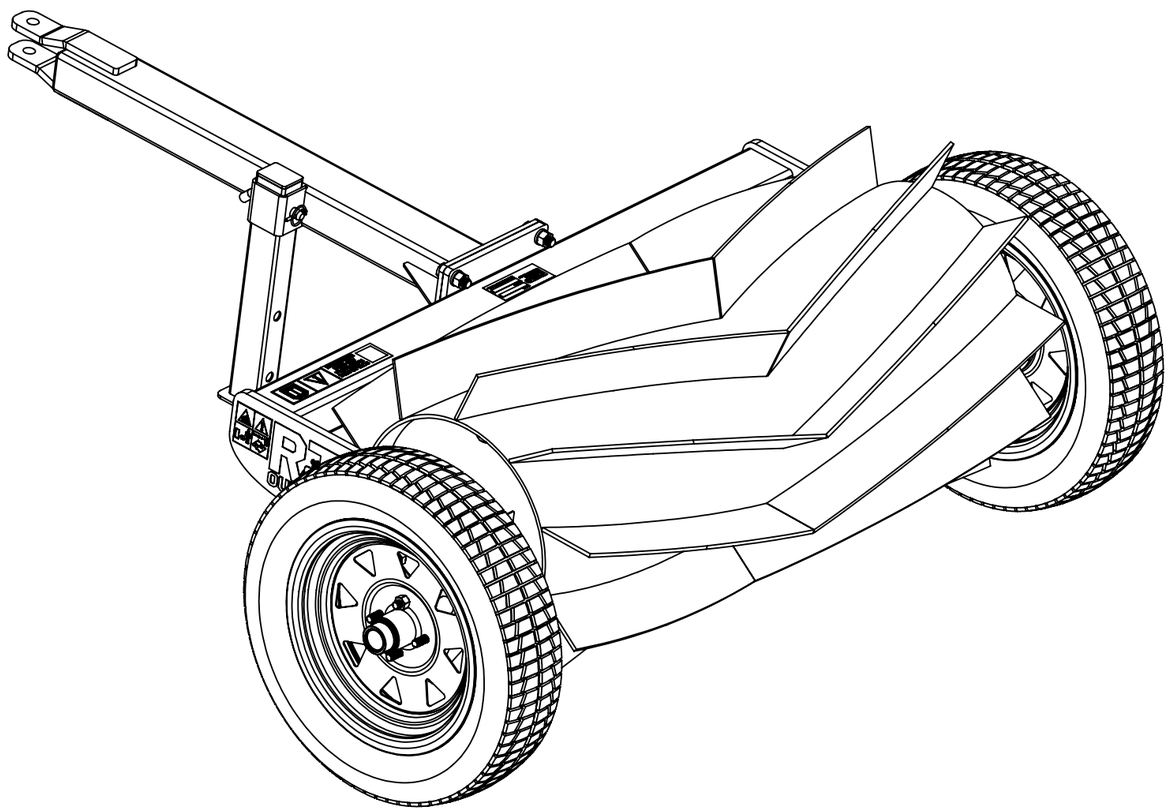

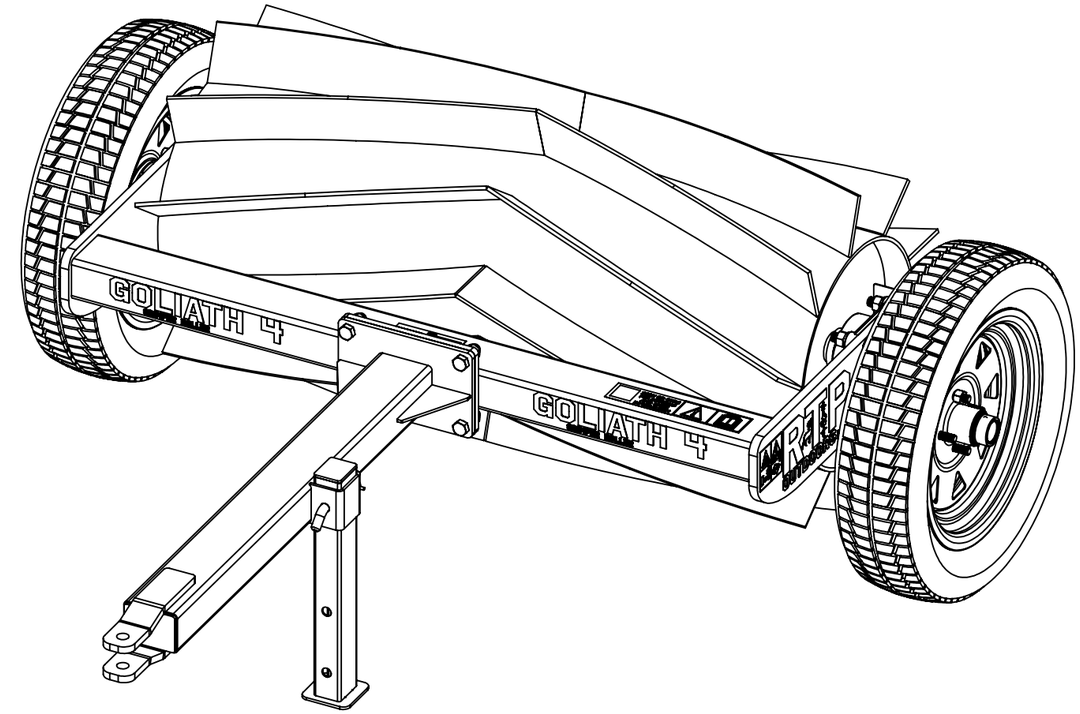

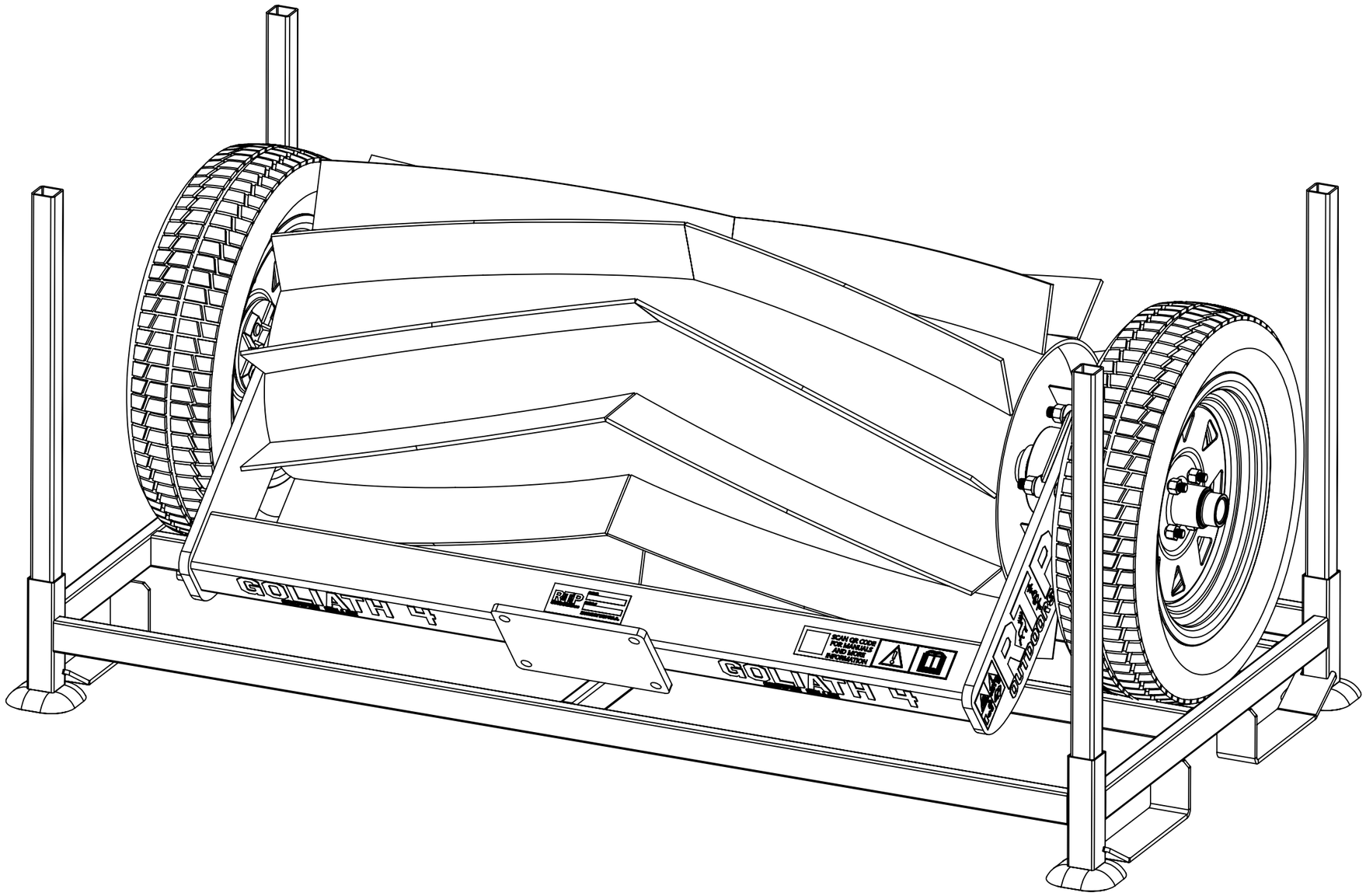
GOLIATH 4
GOLIATH 4
SCAN QR CODE FOR MANUALS AND MORE INFORMATION